INSTITUTE OF PHYSICS PUBLISHING METROLOGIA

Metrologia **42** (2005) S187–S192 doi:10.1088/0026-1394/42/6/S09

A low differential-pressure primary standard for the range 1 Pa to 13 kPa

A P Miiller, C R Tilford[1] and J H Hendricks

National Institute of Standards and Technology, 100 Bureau Drive, Gaithersburg, MD 20899-8364, USA

Received 30 August 2005
Published 9 November 2005
Online at stacks.iop.org/Met/42/S187

Abstract
The National Institute of Standards and Technology (NIST) has completed the development of a low differential-pressure primary standard covering a range from 1 Pa to 13 kPa for operation with line pressures up to 200 kPa. The standard is based on an ultrasonic interferometer manometer (UIM) primary pressure standard and includes a test-instrument manifold with pressure control systems. The standard was found to be equivalent to low differential-pressure primary standards at three other national metrology institutes (NMIs) in a recent international key comparison. Initial performance of the standard was limited in large part by pressure instabilities. This problem has been addressed with the development of two types of active pressure control, one for calibrating pressure-measuring instruments such as capacitance diaphragm gauges, resonant silicon gauges and Bell-type micromanometers and the other for characterizing pressure-generating instruments such as conical-piston, ball and force-balanced piston gauges. The UIM is characterized by a standard ($k = 1$) uncertainty due to systematic effects of $[(3 \times 10^{-3}\,\mathrm{Pa})^2 + (3.2 \times 10^{-6} P)^2]^{1/2}$ where P is the pressure in pascal. Random uncertainties are dominated by pressure instabilities which can be controlled to a level that varies from standard deviations of 3 mPa at lowest differential pressures to about 60 mPa at full range. The NIST primary standard is described, along with results of comparisons with primary standards developed at other NMIs.

1. Introduction

Differential-pressure measurements are often a limiting factor in flow metrology. Large numbers of pressure transducers are used for this purpose, and consequently there is a correspondingly large demand for calibrations. As the performance of pressure transducers has improved there has been an increased demand for lower-range differential-pressure calibrations with higher accuracy. There are now a significant number of commercial transducers available with full-scale ranges of 1 kPa or less, and the best of these will repeat to within 0.01% or better of their full scale pressure. Most of them are used with nominal line or reference pressures of 100 kPa. Different types of standards have been developed for differential-pressure calibrations, but there has been considerable uncertainty about the absolute accuracy of some of the more sensitive standards.

Several years ago the National Institute of Standards and Technology (NIST) began the development of a new low differential-pressure primary standard [1] based on a mercury ultrasonic interferometer manometer (UIM) with a full-scale range of 13 kPa. Manometers are pressure-measuring devices and their use in calibrating secondary standards that measure differential pressures (e.g. capacitance diaphragm gauges (CDGs), resonant silicon gauges (RSGs) and Bell-type micromanometers) requires a pressure control system. Even for pressure-generating secondary standards (e.g. conical-piston, ball and force-balanced piston gauges) use of the UIM requires control of the reference pressure.

This paper briefly describes the UIM, but describes in detail the pressure-control systems. Results for comparisons

[1] Retired.

Table 1. Sources and magnitudes of the standard ($k = 1$) uncertainties due to systematic effects in the 13 kPa UIM.

Parameter	Type	Parameter uncertainty	Fractional uncertainty in pressure (parts in 10^6)
Uncertainties proportional to pressure ($P > 4$ Pa)			
Acceleration of gravity	A, B	10^{-6} m s^{-2}	0.1
Mercury density			
Assumed value at 23 °C	B	13×10^{-3} kg m^{-3}	1
Variations due to			
Measured temperature	A, B	3 mK	0.5[a]
Thermal expansion	B		0.02
Liquid column height			
Verticality	B	1 mrad	1
Ultrasonic frequency	A, B	1 s^{-1}	0.1
Speed of sound			
Measured value, 23 °C	A	2 m s^{-1}	1.4
Variations due to			
Density variation	B	16×10^{-3} kg m^{-3}	0.6
Temperature	A, B	3 mK	1[a]
Diffraction-corrected value	B	1.4 m s^{-1}	1
Diffraction correction	B	1.6×10^{-6}	1.7
Total (root-sum-square)			3.2
Uncertainties due to phase nonlinearity and zero instability (all Type B evaluations)			
$P > 4$ Pa		3×10^{-3} Pa	
$P < 4$ Pa		$[(1 \times 10^{-3}\ \mathrm{Pa})^2 + (7 \times 10^{-4} P)^2]^{1/2}$	

[a] These uncertainties are positively correlated and, therefore, are linearly summed before taking RSS.

with primary standards developed at other NMIs are also presented.

2. The UIM primary standard

Different elements of the design and performance of the UIMs developed at NIST have been previously described [2–4]. The unique feature of the UIMs is that the change in height of the manometric-fluid surfaces (column heights) is determined by an ultrasonic technique. A transducer at the bottom of each liquid column generates a pulse of ultrasound (typically near 10 MHz) that propagates up the column, is reflected from the liquid–gas interface and returns to be detected by the transducer. The change in phase of the returned signal is proportional to the length of the column (allowing for temperature and pressure corrections), and, with careful phase measurement, length changes of 10^{-5} mm can be detected. The manometers are otherwise conventional, although care has been taken to minimize error. For example they employ a W or three-tube design to correct for possible tilt, large-diameter (75 mm) liquid surfaces to minimize capillary effects, thermal shields to stabilize the temperature and minimize its gradients and high-vacuum techniques to minimize leaks and pressure gradients.

Table 1 lists the standard ($k = 1$) uncertainties arising from systematic effects in the 13 kPa mercury UIM, which were obtained by Type A and Type B evaluations [5, 6]. The density of the mercury used to fill this UIM was not directly measured, but was estimated from the measured densities of other samples purified at NIST. At lowest pressures, the standard deviation (SD) of the measured pressure is approximately 1 mPa. However, at pressures above about 4 Pa the low-pressure uncertainty is limited by residual systematic nonlinearities in the phase-measurement circuitry. These nonlinearities are difficult to evaluate, but a conservative estimate is that they contribute no more than 3 mPa to the standard uncertainty. At higher pressures, the uncertainty due to systematic effects is principally determined by the uncertainty of the speed of sound (and hence the ultrasonic wavelength), nonlinear propagation characteristics of the ultrasound and temperature corrections. Taking all sources into account, the combined standard ($k = 1$) uncertainty due to systematic effects of the UIM at pressure P (in pascal) is given by

$$u_{\mathrm{UIM}}(P) = [(1 \times 10^{-3}\ \mathrm{Pa})^2 + (7 \times 10^{-4} P)^2]^{1/2} \quad \text{for } P < 4\ \mathrm{Pa},$$

$$u_{\mathrm{UIM}}(P) = [(3 \times 10^{-3}\ \mathrm{Pa})^2 + (3.2 \times 10^{-6} P)^2]^{1/2} \quad \text{for } P \geqslant 4\ \mathrm{Pa}.$$

These statements of uncertainty have been validated by a recent international key comparison [7] of low differential-pressure primary standards at four national metrology institutes (NMIs), the results of which are described briefly in section 5.

3. System for pressure-measuring instruments

Temperature-induced pressure instabilities can be a major problem when calibrating instruments that measure low differential pressures. For example, when differential measurements are made relative to a reference or line pressure near 100 kPa, a change in the temperature difference of only 3 mK between the 'high' and reference pressure sides of the system will cause a differential pressure change of 1 Pa—equal to or larger than the lowest calibration pressures for

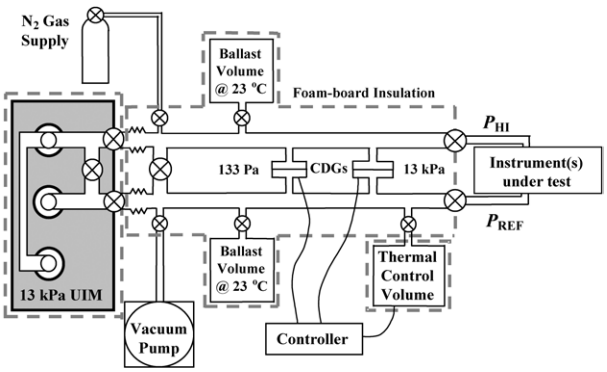

Figure 1. System used for calibrating pressure-measuring instruments such as Bell-type mircromanometers, CDGs or RSGs.

low-range instruments. The effects of such changes will depend largely on the relative pneumatic response times of measuring instruments. The response time of the UIM to small pressure changes is of the order of 1 min, whereas the response times of instruments being calibrated are typically much less. Temperature and resultant pressure changes with time constants of minutes will cause unstable differential pressures and random errors in the calibration data that can significantly exceed the inherent capabilities of the pressure standard and possibly those of the test instrument. Therefore, to minimize these errors it is necessary to control the temperatures and pressures. Hydrostatic head effects are also a concern, again because the absolute pressures are so much larger than the differential pressures. But these can be minimized using the temperature control and uniformity necessary for pressure control and by minimizing vertical gradients in the plumbing (i.e. height differences between the UIM and the test instrument).

The calibration system, which is illustrated in figure 1, consists of three parts: the UIM, the pressure manifold and the pressure control system. The UIM, which necessarily has vertical gradients in its internal 'plumbing' and consequent gas-pressure gradients, is enclosed in a separate thermal enclosure consisting of an aluminium shell with a minimum thickness of 5 cm, surrounded by 2.5 cm of foam-board insulation to minimize temperature changes and gradients. The temperature is measured with platinum resistance thermometers, allowing an accurate correction for the hydrostatic-head pressure corrections. The UIM is connected to the pressure manifold by bellows for thermal and mechanical isolation and includes a set of valves to isolate it from the rest of the system when not in use, and a bypass valve that can be opened to generate a zero-pressure reference condition.

3.1. Pressure control

Both passive and active measures are used to control temperature-induced pressure fluctuations. The passive control consists of two measures: (1) enclosing the pressure manifold with foam-board insulation and (2) adding a large ballast volume (45 L each) to each side of the 0.5 L manifold. These are matched in size and immersed in a large temperature bath controlled at (23 ± 0.001) °C. As described in the next section, the pressure instabilities of the system with passive measures alone remain significantly larger than the 1 mPa resolution of the UIM.

The active control consists of a temperature-controlled volume (the thermal control volume of figure 1) attached to the reference side of the pressure manifold. The control volume is 50 cm^3, consisting of an array of 1 cm diameter holes drilled into a copper block. The volume is pneumatically connected to, but thermally isolated from, the pressure manifold by a thin-wall stainless steel bellows. The temperature of the volume is controlled using a Peltier heater/cooler module in thermal contact with the copper block, a bi-directional power supply and an electronic controller employing both proportional and integral control. Depending on the range of the differential pressure to be controlled, the controlling signal is generated by the difference between a stable adjustable voltage source and the output of either a 133 Pa or a 13.3 kPa differential CDG connected between the two sides of the pressure manifold. With active control, it possible to achieve both short- and long-term pressure stability of a few millipascals within minutes of generating a new differential pressure. At higher pressures requiring the use of the 13.3 kPa CDG the stability deteriorates by about a factor of 20.

3.2. System performance

In order to test the effectiveness of the different methods of pressure control, a 1.33 kPa CDG was mounted on the calibration system and differential pressures were measured relative to a line pressure of 100 kPa at nominally 1 min intervals. Figure 2(*a*) illustrates the random variations of the UIM and CDG readings and figure 2(*b*) illustrates their differences.

In section I of the figures the data were taken with open bypass valves to maintain zero differential pressure between the two sides of the system. The SD of the difference between the CDG and UIM data, 1.8 mPa, is indicative of the limiting performance of the entire system and approaches the limiting performance of the UIM when isolated from the manifold (SD ∼ 1 mPa).

Section II of figure 2 illustrates the variation in readings after a differential pressure of 1 Pa was generated and maintained using both active and passive control during a rise in the laboratory temperature of 0.08 °C. Note that the SD of the difference between CDG and UIM readings, 2.5 mPa, is comparable to the performance of the system with the bypass valve open.

In section III the active pressure control was turned off (while the laboratory temperature increased by 0.04 °C), and consequently the SD of the calibration data increased by about a factor of 3. Section IV illustrates that, without active control and with ballast volumes isolated from the manifold, the SD increased by an additional order of magnitude in response to an increase in laboratory temperature of 0.07 °C. Finally, in section V, removing the insulation around the pressure manifolds increased the SD by another factor of 3, even though there was only a small change of 0.01 °C in the laboratory temperature.

In short, the combination of passive and active pressure controls reduced the random errors of the data by two orders of magnitude.

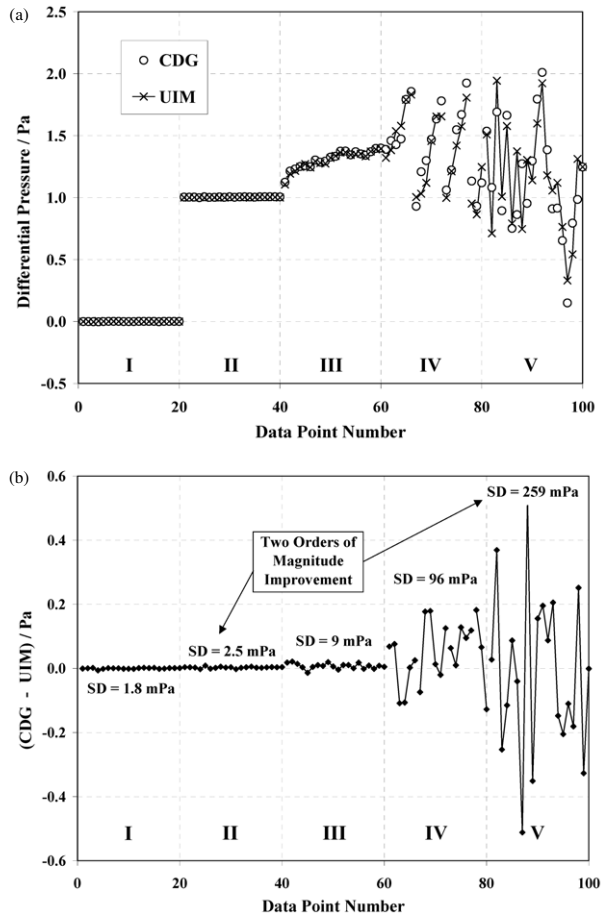

Figure 2. (*a*) Differential pressure readings of a CDG and the UIM and (*b*) the difference between these readings taken with full active and passive pressure controls (I and II), only passive controls, ballast tanks plus foam board (III), or foam board only (IV) and no controls (V).

4. System for pressure-generating instruments

Pressure-generating instruments generate a differential pressure by passing a controlled flow of gas through a conductance determined by a ball or a conical disc located in an orifice, or a piston centred in a cylinder. These instruments are of two general types. The first type, sometimes called 'single-ended', generate only gauge pressures, i.e. differential pressures referenced to the ambient atmospheric pressure. The second type, called 'double-ended', generate true differential pressures, i.e. the reference pressure can be controlled, independent—at least to first order—of ambient pressure.

The calibration system for single-ended instruments must address two problems. First, the UIM must be operated as part of a closed system using pure dry gases to avoid contaminating the high-purity and well-characterized mercury. Second, fluctuations in ambient pressure caused by building air conditioning systems or opening/closing doors can generate significant random noise in the data. To counter these problems, the NIST system includes a large sealed and thermally insulated test chamber (nominal interior dimensions: 50 cm × 35 cm × 36 cm) that can be pneumatically isolated from the UIM and provides a pressure-controlled ambient for

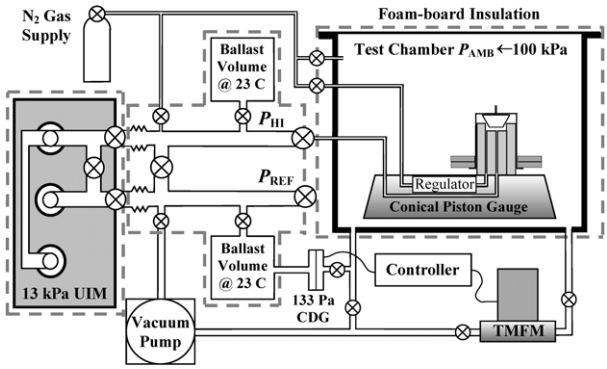

Figure 3. System used for calibrating pressure-generating instruments such as a conical piston gauge (shown here), a ball gauge or a force-balanced piston gauge.

the test instrument, as illustrated in figure 3. The test chamber includes provision for removing gas at a controlled rate to compensate for the discharge of gas from the test instrument so as to maintain a constant or slowly varying ambient pressure.

Double-ended instruments present less of a problem. Both the reference and high-pressure sides of the instrument are sealed and can be filled with pure dry gas and connected directly to the UIM. However, some of these instruments (e.g. conical piston gauges) employ two pressure generators, one for the reference pressure, a second for the high pressure. Both generators are referenced to ambient pressure, and atmospheric instabilities can generate second order instabilities in the differential pressure. Double-ended force-balanced piston gauges use a single piston and cylinder, but the gas flow that generates the differential pressure is vented to the atmosphere, and fluctuations in atmospheric pressure will cause detectable perturbations of the differential pressure. In the first case, the perturbations can be significantly reduced by placing the instrument in the controlled-pressure ambient of the test chamber used for single-ended instruments. In the second case it is necessary only to vent the gas into the pressure-controlled test chamber.

4.1. Test-chamber pressure control

The pressure inside the test chamber is actively controlled relative to the UIM reference pressure using a thermal mass flow meter (TMFM), a 133 Pa differential CDG and an electronic controller employing both proportional and integral control. The controlling signal is generated by the difference between a stable adjustable voltage source and the output of the CDG connected between the UIM reference-side ballast tank and the test chamber. The pressure in the chamber can be set and controlled at a desired level (usually near 100 kPa) by adjustments to the controller voltage so that the outflow of gas from the test chamber into a vacuum pump is equal to the inflow of gas from the instrument under test. In order to accommodate the range of flow rates from different test instruments, one of four available TMFMs with full-scale ranges of 10 sccm, 100 sccm, 1000 sccm and 5000 sccm (1 sccm = 2.68×10^{-3} mol s^{-1}) is connected into the system. Under normal test conditions the pressure in the test chamber is controlled so that it is close to the pressure in the reference side of the manifold and UIM. The CDG serves to control the

test chamber pressure and at the same time isolates the UIM from air in the test chamber.

4.2. System performance

For single-ended instruments, the CDG readings used to control the test chamber pressure (P_{AMB}) are also used to correct for any offset between the test-chamber pressure and the UIM reference pressure (P_{REF}). The error in such corrections is relatively small. For example, a conical piston gauge generating a pressure of 400 Pa requires a flow of less than 750 sccm. Under these conditions the test-chamber pressure can be controlled so that differences from the UIM reference pressure have a SD of 1 mPa or less. For generated pressures of the order of 10 kPa the flow increases to about 3000 sccm. In this case the SDs of the pressure differences increase to about 5 mPa. In both cases the reference pressure corrections are a few parts in 10^6 or less. The limiting random noise of the generated differential pressure depends on both the test instrument and the ambient pressure stability, but for the best instruments the reduction in noise using the controlled ambient of the test chamber is about a factor of 5 compared with operation in a room pressure ambient.

For double-ended instruments the random noise will also depend both on the instrument and the ambient pressure, but for the best instruments venting the gas flow into the test chamber typically reduces the random noise by about an order of magnitude. The results of one such calibration are presented in section 5.2.

5. Comparisons with other primary standards

Confidence in the stated uncertainty for the NIST standard has been increased by the results of comparisons with primary standards from other national laboratories.

5.1. Key comparison CCM.P-K5

A key comparison (CCM.P-K5) of low differential-pressure standards [7] was carried out at four NMIs[3] between July 1998 and May 1999 to determine the degrees of equivalence of the standards at differential pressures in the range 1 Pa to 1000 Pa, superimposed on a reference pressure of nominally 100 kPa. The primary standards included three liquid-column manometers and one double pressure balance. The transfer standard package consisted of two RSGs (1 kPa and 10 kPa) to provide high calibration stability and two CDGs (133 Pa each) to provide high resolution at low differential pressures.

The calibration stability of the RSGs during the ten-month interval of the comparison was critical to its success, with shifts ranging from only 0.01% at 100 Pa to a few parts in 10^6 or less at 10 kPa. Although stability of the CDGs was significantly worse (shifts for one of the gauges as large as 0.5% at pressures between 1 Pa and 100 Pa) it was possible to significantly reduce the effects of CDG instability by re-scaling their readings to those of the RSGs at an overlapping pressure (100 Pa). As a result, the uncertainty due to long-term shifts in the gauges was commensurate with the uncertainties stated by the participants for their primary standards over the entire range of the comparison, making it possible to elucidate differences, if any, among the primary standards.

[3] NIST as pilot laboratory, IMGC (Istituto di Metrologia G Colonnetti), MSL–NZ (Measurement Standards Laboratory, New Zealand) and NPL–UK (National Physical Laboratory, United Kingdom).

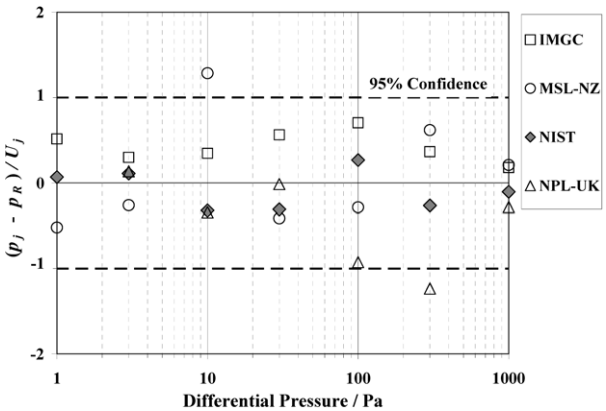

Figure 4. Degrees of equivalence of the primary standards as expressed by the ratio of the deviation of the mean gauge reading (p_j) obtained by each NMI from the key comparison reference value (p_R) divided by the uncertainty of this deviation at the 95% confidence limit (U_j).

The results of the key comparison are summarized in figure 4, which illustrates the degrees of equivalence for each of the primary standards. The degree of equivalence at each pressure is expressed by the deviation of the mean gauge reading (p_j) obtained by NMI j from the key comparison reference value (p_R), divided by the uncertainty (U_j) of this deviation at a 95% level of confidence. Details concerning the evaluation of equivalence are given in [7]. As may be seen, the results for NIST lie well within the 95% confidence limits at all pressures, which validates the stated uncertainties for the NIST standard (section 2) and supports the calibration measurement capabilities (CMCs) for this standard given in Appendix C of the BIPM Key Comparison Database.

5.2. Comparison of the CMI low differential-pressure standard with the NIST standard

In April 2000 the Digital Piston Gauge Standard from Czech Metrology Institute (CMI) was transported to NIST for a comparison with the NIST primary standard. This provided NIST the first opportunity to characterize the performance of a force-balanced piston gauge.

The CMI standard is based on a commercially available force-balanced piston gauge [8] with construction changes to enable generation of both gauge and differential pressures from 1 Pa to 3200 Pa. This device utilizes a large-diameter non-rotating piston that is suspended coaxially inside the cylinder and is connected directly to an electronic force balance (a commercial mass comparator). An associated flow controller is adjusted so that the flow of gas through the piston/cylinder gap generates the desired difference in pressure ($P_{HI} - P_{REF}$) across the two sides of the piston. The resultant force from the pressure difference is measured by the force balance and converted into differential pressure based on knowledge of the effective area of the piston/cylinder assembly.

The CMI standard is a double-ended device, and for this comparison the 'high' (P_{HI}) and 'low' (P_{REF}) sides of the

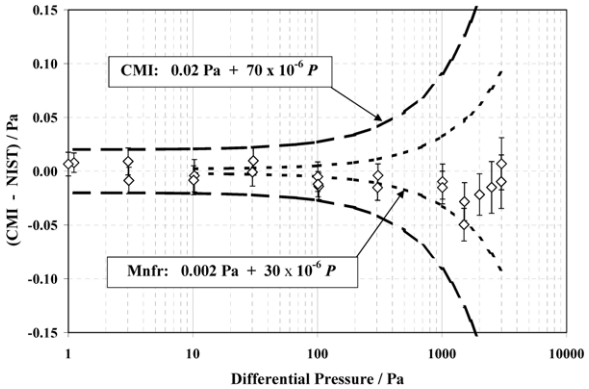

Figure 5. Characterization of CMI's Digital Piston Gauge Primary Standard (based on a commercial force-balanced piston gauge [8]). The dashed and dotted lines give the expanded uncertainty as evaluated by CMI and by the manufacturer, respectively.

CMI standard (located outside of the test chamber of figure 3) were connected directly to the corresponding sides of the UIM manifold. The exhaust flow of the associated controller, which is normally vented into the room, was redirected through the test chamber to provide a stable and controlled ambient reference pressure, thereby improving the random noise by a factor of 10.

The results [9] are illustrated in figure 5 where the error bars represent the combined expanded ($k = 2$) uncertainties arising from fluctuations in the generated pressure and from systematic effects in the UIM. As may be seen, the measurement performance of the CMI standard is somewhat consistent with the total expanded uncertainty given by the manufacturer of the instrument ($U_{\mathrm{TOT}} = 0.002\,\mathrm{Pa} + 30 \times 10^{-6} P$), which is primarily due to uncertainty in the effective area arising from dimensional measurements. A larger expanded uncertainty ($U_{\mathrm{TOT}} = 0.02\,\mathrm{Pa} + 70 \times 10^{-6} P$) has been evaluated by CMI after including additional uncertainties in the effective area arising from laminar flow effects in the piston/cylinder gap. The data on the comparison with the NIST standard lie well within this larger uncertainty.

6. Concluding remarks

In addition to applications described herein, the NIST low-range differential-pressure primary standard has been successfully used to calibrate other pressure-measuring instruments such as Bell-type micromanometers as well as to characterize other pressure-generating instruments such as ball gauges and conical-piston gauges. As a result the NIST standard is believed to be highly capable of meeting the calibration needs of currently available low-range differential-pressure instruments.

In the near future this standard will be moved to NIST's new Advanced Measurement Laboratory, which is a state-of-the-art facility with enhanced vibration isolation, humidity control and ambient temperature regulation (±0.1 °C for the UIM laboratory). This should further reduce temperature-induced pressure fluctuations. If the need exists, and pressure control is adequate, the resolution and low-pressure uncertainty could be further improved by an order of magnitude with a UIM that uses a low-density manometric fluid (oil or water).

Acknowledgments

The timely and satisfactory completion of this system would not have been possible without the technical assistance of Jeff Kelley and Fred Long. The development of this system was financed in part by the NIST Calibration Services Development Fund.

References

[1] Tilford C R and Miiller A P 1997 *Proc. 1997 NCSL Workshop and Symp., National Conf. Standards Laboratories (Boulder, CO, USA)* pp 211–9
[2] Heydemann P L, Tilford C R and Hyland R W 1977 *J. Vac. Sci. Technol.* **14** 597–605
[3] Tilford C R 1977 *Appl. Opt.* **16** 1857–60
[4] Tilford C R 1987 *Metrologia* **24** 121–31
[5] ISO 1993 *Guide to the Expression of Uncertainty in Measurement* (Geneva: International Organization for Standardization)
[6] Taylor B N and Kuyatt C E 1994 Guidelines for evaluating and expressing the uncertainty of NIST measurement results *NIST Technical Note* 1297, 1994 edn (Washington: US Government Printing Office)
[7] Miiller A P, Cignolo G, Fitzgerald M P and Perkin M P 2002 *Metrologia* **39** *Tech. Suppl.* 07002
[8] Rendle C G 1993/94 *Metrologia* **30** 611–13
[9] Krajicek Z and Tesar J 2000 private communication