Using characterized variable reservoir helium permeation leaks to generate low flows

S. A. Tison and Pardeep Mohan[a)]
Thermophysics Division, National Institute of Standards and Technology, Gaithersburg, Maryland 20899

(Received 18 May 1993; accepted 27 November 1993)

Fixed reservoir helium permeation leaks are frequently used to generate known flows for calibration of leak detectors. Determination of the flow from helium permeation leaks becomes difficult in the low flow range (10^{-12} mol/s, 2×10^{-8} std. cc/s 273.15 K, and below) which is of high interest to industrial and government users. It has been shown that the flow of a helium permeation leak varies linearly with the helium concentration within the leak reservoir. This relationship was established over a flow range from 10^{-11} to 10^{-12} mol/s for a particular variable reservoir leak artifact by measuring the flow generated when the reservoir concentration was varied over a range from 4.6×10^{-1} to 4×10^{-2} mol/ℓ. Using this relationship, flows in the 10^{-13}–10^{-14} mol/s region were calculated from measured helium concentrations in the leak artifact reservoir and then compared with the NIST primary leak standard. The results showed agreement, to within experimental error between the two techniques for generating low flows. This technique of generating known low flows by varying the helium concentration in the reservoirs of previously characterized helium permeation leak artifacts has the potential of significantly extending low flow measurements beyond current capabilities.

I. INTRODUCTION

Measurement of leak rates is important for a variety of industries which use leak detection as a method of nondestructive testing to assure product reliability and performance. In particular, measurement of extremely small flows is of high importance to, but not limited to the nuclear, vacuum research, and military communities. Measurement of flows below 10^{-12} mol/s is extremely difficult with many measurement techniques, such as the pressure rate of rise method, due to the high level of background gases and the prohibitive amount of time required to accumulate an adequate amount of gas for the pressure measurement. Other hybrid methods, such as the accumulate–dump technique,[1] work well at these low flows but result in large uncertainties in the flow measurement; up to 20% when measuring flows below 10^{-12} mol/s. Constant pressure flowmeters, such as those used at NIST[2–5] for calibrations of leak standards, can be used to measure flows below 10^{-12} mol/s using flow division. However, this requires the incorporation of additional uncertainties that are difficult to quantify. Variable reservoir helium permeation leaks can be used to generate low flows (10^{-12} mol/s and below) by varying their helium reservoir concentration if the relationship between the helium reservoir concentration and corresponding helium flow is known.

While there are many techniques[2] for measuring or generating low flows, each has its limitations and verification of the predicted systematic uncertainties is difficult. Comparison of two techniques of generating low flows which rely on different physical processes enables one to evaluate the limits of the uncertainties of the two techniques. This article describes the use of a constant pressure flowmeter to establish the relationships between the concentrations and flows of two variable reservoir leaks (VRLs) over the leak rate range from 3×10^{-11} to 1×10^{-12} mol/s. By extrapolating the relationship to lower leak rates, the VRLs are then used to generate flows in the range of 10^{-13}–10^{-14} mol/s which are compared with a constant pressure flowmeter using a flow division technique.

II. DESCRIPTION OF APPARATUS

The primary leak standard[3] that has been developed at NIST and used in this comparison with the variable reservoir leaks (VRLs) is shown in Fig. 1. The primary leak standard is divided into three major components; the vacuum chamber, the leak manifold, and the flowmeter. The bellows flowmeter, used for all of the results presented here, is described in detail in the literature.[3–5] The vacuum chamber is composed of an upper and lower chamber which are separated by a 1 cm diam orifice. A 2500 ℓ/s turbo molecular pump is utilized to achieve a high vacuum. The vacuum system is composed of stainless steel components connected with all-metal seals. Three mass spectrometers and three ionization gages are connected to the upper chamber for partial and total pressure measurements. One ionization gauge is attached to the lower chamber. The flow may be directed from the flowmeter or leak manifold into either the upper or lower chambers.

Determination of the flow from a helium leak is accomplished by the following procedure. The leak is placed on the leak manifold and the system is evacuated. Gas emitted from the unknown leak is directed into the upper vacuum chamber, flows through the orifice, and is then evacuated by the pump. After the gas flow and the upper and lower chamber pressures reach equilibrium, the upper chamber helium partial pressure is measured using a mass spectrometer tuned to helium. The leak is then isolated from the vacuum chamber, the flowmeter is pressurized with helium, and the flow is

[a)]Guest Researcher from the National Physical Laboratory, New Delhi, India.

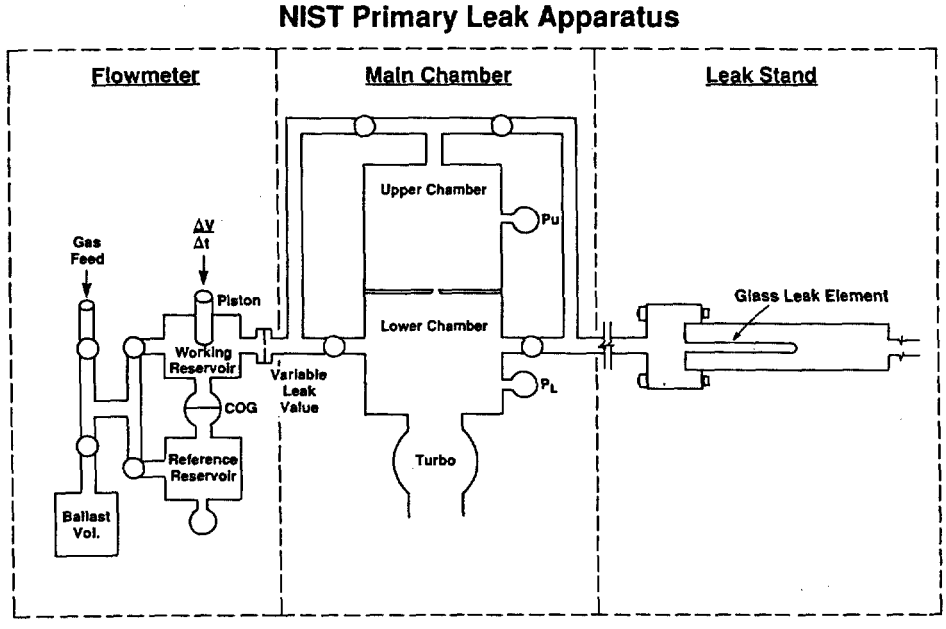

FIG. 1. Schematic diagram of NIST Primary Leak Standard (Ref. 3).

adjusted such that, upon stabilization, the upper chamber helium partial pressure is nominally the same as the partial pressure recorded while the leak was connected to the vacuum chamber. The flow rate is then measured using the constant pressure flowmeter.[3,4]

The uncertainties of the flowmeter below 1×10^{-12} mol/s increase[3] to 10% or more. To measure leak rates lower than 1×10^{-12} mol/s with uncertainties ranging from 5% to 8%, a flow division technique can be employed. The flow division technique, for a constant orifice conductance and pumping speed, requires that the ratio of the flows directed alternately into the upper and lower chambers needed to establish a given upper chamber pressure is independent of the chamber pressures.

This ratio, referred to as the flow ratio $R_{U/L}$, is measured using relatively high flow rates into both chambers, where the uncertainty associated with the flowmeter is low, and then assumed constant (to within a few percent) when used at lower flow rates. The measured flow ratio for helium has a 2σ random uncertainty of 1.0% and a systematic uncertainty of 0.8%. The average upper to lower flow ratio for helium has a value of 0.015 02 which has a 2σ standard deviation of the mean of 0.3%. To measure leak rates using the flow division technique, the flow from the flowmeter is directed into the lower chamber of the vacuum system and is adjusted so that the equilibrium upper chamber pressure is matched to the upper chamber pressure measured when the leak was valved into the upper chamber. The flow of the leak can be determined as follows:

$$\dot{N}_U=\dot{N}_L\cdot R_{U/L}, \tag{1}$$

where $\dot{N}_U$ is the flow of the leak into the upper chamber, $\dot{N}_L$ is the flow of the flowmeter into the lower chamber, and $R_{U/L}$ is the upper to lower flow ratio. This technique assumes that the pumping speed of the turbomolecular pump and $R_{U/L}$ are independent of pressure at low partial pressures. This assumption seems reasonable but has not been experimentally verified for pressures below 10^{-8} Pa.

III. PROPERITES OF VARIABLE RESERVOIR PERMEATION LEAKS

The flow of helium from permeation leaks is due to the diffusion of helium across the glass element caused by the concentration gradient within the glass. The concentration gradient across the glass element in a helium permeation leak is dependent on the concentration of helium at the surface of the glass element. The concentration C_s of the adsorbed helium is in turn dependent upon the solubility of the helium in the glass of interest and is given by

$$C_s=SC_g, \tag{2}$$

where C_s, the concentration of helium at the surface of the leak element, is a function of S, the Oswalt solubility,[7] and C_g, the helium concentration of the gas surrounding the glass element (reservoir concentration). The steady state helium permeation through the glass element is given by Fick's first law,[6] Eq. 3. Assuming that the helium concentration on the vacuum side of the leak element is zero and that the concentration difference ΔC is given by SC_g, one has

$$\text{flow}=D(SC_g)A', \tag{3}$$

where A' is a function of the area, thickness, and geometry of the leak element. For diffusion through a flat plate A'=(surface area/plate thickness). The Oswalt solubility is independent of temperature and concentration for values over the range of this study[7] and is assumed to be constant for a given leak element. The diffusivity D is a function of the physical properties of the glass and the temperature and has been shown to be constant for moderate changes in he-

lium concentration including the range of concentrations in this study.[7] Changes in the helium reservoir temperature at a constant reservoir concentration result in changes in flow which attain equilibrium values within one hour. Changes in the helium reservoir concentration require longer times, typically between 3 and 14 days, to reach equilibrium flow.

In summary, leak rates from variable reservoir helium permeation leaks are expected to be a function of the helium reservoir concentration and temperature which is expressed by

$$\text{leak rate} = A(T)C_g, \tag{4}$$

where

$$A(T) = DSA'.$$

The geometric constant A' is hard to estimate and published values of the solubilities and diffusivities of helium in specific glasses can vary widely,[7] but $A(T)$ can be determined by measuring the flow of the variable reservoir permeation leak at various helium reservoir concentrations and temperatures. This relationship can then be used to calculate known flows for other concentrations. While extrapolation of this relationship to higher reservoir concentrations may produce significant deviations due to possible changes in the element diffusivity, it is expected that extrapolation to lower concentration values (more dilute solutions) would be accurately predicted by Eq. (4). This assumes that the permeant (helium) acts as a dilute solute in a glass solvent and that Fick's first law of permeation is valid.

IV. CHARACTERIZATION OF VRLs

The relationship between the helium reservoir concentration and the equilibrium leak rate has been established for two VRLs by comparing the flows generated by the VRLs with those generated by the flowmeter as explained in the following section. The leaks were constructed using commercially available tubular pyrex (7740) glass leak elements which were then enclosed in a stainless steel reservoir with all-metal seals. VRL NBSL40 has an element thickness of approximately 0.5 mm while VRL NBSL43 has a thickness of 1 mm. Characterization of the VRLs was accomplished in the following manner. The leak was connected to the leak manifold and the leak reservoir was evacuated with a roughing pump. The reservoir was filled to a predetermined pressure with 99.99% pure helium. The reservoir pressure and temperature were allowed to stabilize, after which the pressure (P) was measured with either a quartz-bourdon-tube type gauge or a capacitance diaphragm gauge. The temperature (T) was also recorded for determination of the reservoir helium concentration (C) which is given as the number of moles (n) per unit volume (V). Typical reservoir pressures were 1 kPa to 2 MPa, from which the helium reservoir concentrations were calculated using the ideal gas law (in compatible units).

$$C_g = (n/V) = P/(RT). \tag{5}$$

The valve to the leak reservoir was then closed to prevent changes in the reservoir concentration which could occur due to subsequent temperature fluctuations. The VRL was allowed to stabilize and was monitored periodically by a mass spectrometer to determine when equilibrium flow had been established. The time for flow equilibration to within 99.9% after a step change in pressure was 6 days for NBSL40 and 14 days for NBSL43 which roughly correspond to the expected relative equilibration times for the given element thicknesses based upon the time dependent diffusion equation The flowmeter was used as discussed earlier to determine the flow of the VRLs at various reservoir concentrations varying from 1×10^{-3} to 1×10^{-1} mol/ℓ

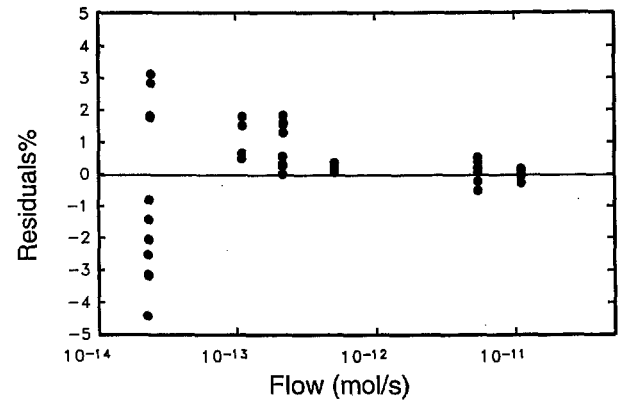

FIG. 2. Residuals of a linear fit of the flow of VRL NBSL40 to the reservoir helium concentration. The intercept of the fit is constrained to be zero.

V. RESULTS

Data for the flow dependence on reservoir concentration as given by Eq. (4) were analyzed using a least squares technique weighted with the inverse reservoir concentration where the helium reservoir concentration C_g is expressed in mol/ℓ and $A(T)$, for a constant temperature, is expressed in ℓ/s. The reservoir concentrations were determined with uncertainties no larger than 0.1%. Fitting of the data for NBSL40 for reservoir pressures ranging from 1 kPa to 2 MPa gave the coefficient $A(23\ ^\circ\text{C}) = 4.2596\times10^{-11}$ ℓ/s with a 2σ standard deviation of 0.07%. Figure 2 shows the residuals (difference of the measured flow from the predicted value) of the fit of the flow. Flows larger than 1×10^{-12} mol/s were obtained using the direct flow method while flows below 1×10^{-12} mol/s were obtained using the flow division technique. Data points above 1×10^{-12} mol/s were used in determining the coefficients of the fit and the intercept of the fit was forced through zero representing zero expected flow at zero helium reservoir concentration. Allowing the intercept to float would result in additional errors when used to extrapolate to lower concentrations. Figure 3 shows the residuals (difference of the measured flow from the predicted value) of a fit to data taken previously[8] on VRL NBSL40, denoted data set 1, as well as the presently reported data, data set 2. Data set 1 was taken one year prior to data set 2 and after recalibration of the flowmeter instrumentation. Separate regressions on data sets 1 and 2 reveal a systematic increase in $A(T)$ of 2.0% from set 1 to set 2. A small percentage, approximately 0.4% out of the 2.0%, of this change can be attributed to changes in the bellows flowmeter due to

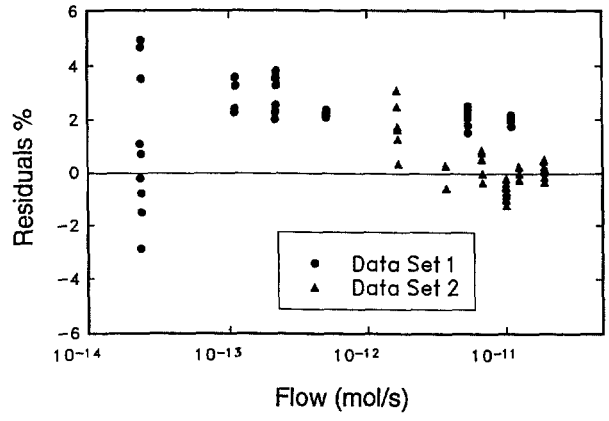

FIG. 3. Residuals of the data for data sets 1 and 2 of a linear fit of the flow of VRL NBSL40 to the reservoir helium concentration for data set 1. The intercept of the fit is constrained to be zero.

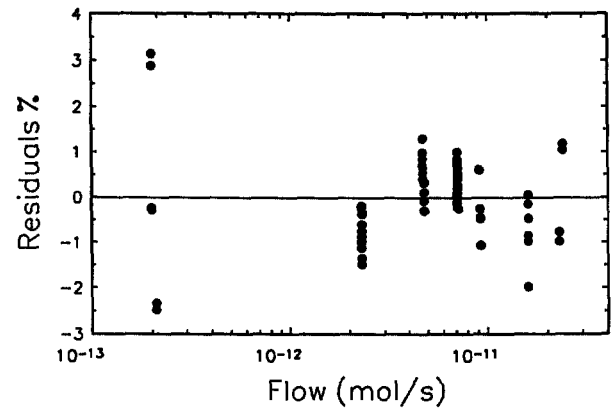

FIG. 4. Residuals of a linear fit of the flow of VRL NBSL43 to the reservoir helium concentration. The intercept of the fit is constrained to be zero.

recalibration of its pressure transducers. The data points below 1×10^{-12} mol/s in Figs. 2 and 3 were taken using the flow division technique. The residuals of the fit for these low data points are well within the expected uncertainties. As the flow decreases below 10^{-13} mol/s, noise associated with measuring the partial pressure of helium in the upper chamber of the vacuum system increases the randomness of the data. The average flow, even at the lowest extreme, is consistent with the expected leak rate to within experimental error.

The analysis of the data for NBSL43 resulted in $A(23\ °C) = 1.8230\times10^{-11}$ ℓ/s with a 2σ standard deviation of 0.05%. This coefficient is based upon measured flows between 2×10^{-13} and 3×10^{-11} mol/s, which corresponded to reservoir pressures between 20 kPa and 2 MPa, with an expected intercept of zero. The residuals (difference of the measured flow from the predicted value) of this fit are shown in Fig. 4 where the data points below 10^{-12} mol/s were measured using the flow division technique. The residuals of the fit are well within the uncertainties associated with the measurement and show no detectable systematic trends. It was expected that enhanced diffusion at high pressures (larger than 1 MPa), which has been observed by a number of researchers[7] for several types of glass diffusion elements may cause nonlinearities in the data. This phenomenon was not detected in this study.

VI. CONCLUSIONS

Two variable reservoir leaks (VRLs) were found to have flows that varied proportionally to their respective helium reservoir concentrations over three decades of helium reservoir concentrations corresponding to reservoir fill pressure of 1 kPa to 2 MPa. The long term stability of VRL NBSL40 as determined over two consecutive years was determined to be ±2% of the characterized slope. Some of the changes in the slope could be attributed to changes in the bellows flowmeter due to recalibration of its pressure sensors.

Comparison of the flows measured using the flow division technique with the values of the VRLs predicted from diffusion theory showed very good agreement. The data showed that although the randomness of the leak rate determination resulted in random deviations from expected values as high as 4.5% at leak rates of 2×10^{-14} mol/s, the average values deviated by no more than 1 % for leak rates over the range from 2×10^{-14} to 8×10^{-13} mol/s tested using the flow division technique. Limitations on using this technique to measure lower flows than those in this study are imposed by the lower flow limit of the flowmeter of 1×10^{-12} mol/s. This study revealed no systematic deviations in the comparison between the constant pressure flowmeter and the VRLs which indicates that both the flowmeter and the VRLs are adequately described with the current models.

The generation of known flows with previously-characterized VRLs is limited only by the ability to measure the helium concentration within the reservoir. As such, this technique has the potential of extending the ability to generate known low flows significantly beyond current capabilities.

[1]M. V. Iverson and J. L. Hartley, J. Vac. Sci. Technol. **20**, 982 (1982).
[2]C. D. Ehrlich and J. A. Basford, J. Vac Sci. Technol. A **10**, 1 (1992).
[3]C. D. Ehrlich and S. A. Tison, NIST (U.S.) Special Publication 250-38, 1992.
[4]K. E. McCulloh, C. R. Tilford, C. D. Ehrlich, and F. G. Long, J. Vac. Sci. Technol. A **5**, 376 (1987).
[5]C. R. Tilford, S. Dittmann, and K. E. McCulloh, J. Vac. Sci. Technol. A **6**, 2853 (1988).
[6]C. Kittel, *Introduction to Solid State Physics* (Wiley, New York, 1976).
[7]J. E. Shelby, *Treatise On Material Science and Technology* (Academic, New York, 1979), Vol. 17.
[8]C. D. Ehrlich, S. A. Tison, H. Y. Hsiao, and D. B. Ward, J. Vac. Sci. Technol. A **8**, 4086 (1990).