the discrepancies between the various carefully done specific-heat experiments on liquid $^3$He. This emphasizes the need for results which extend to high-enough temperatures so that important thermodynamic checks can be performed. We find that only our data satisfy these tests. The Landau Fermi-liquid parameters determined with use of earlier specific-heat data must therefore be altered with the consequence that many experiments and theoretical calculations will have to be reevaluated.

[1]A. C. Anderson, W. Reese, and J. C. Wheatley, Phys. Rev. 130, 495 (1963).
[2]W. R. Abel, A. C. Anderson, W. C. Black, and J. C. Wheatley, Phys. Rev. 147, 111 (1966).
[3]A. C. Mota, R. P. Platzeck, R. Rapp, and J. C. Wheatley, Phys. Rev. 177, 266 (1969).
[4]W. P. Halperin, F. B. Rasmussen, C. N. Archie, and R. C. Richardson, J. Low Temp. Phys. 31, 617 (1978).
[5]T. Haavasoja, Ph.D. thesis, Helsinki University of Technology (unpublished); T. A. Alvesalo, T. Haavasoja, and M. T. Manninen, J. Low Temp. Phys. 45, 373 (1981); T. A. Alvesalo, T. Haavasoja, M. T. Manninen, and A. T. Soinne, Phys. Rev. Lett. 44, 1076 (1980).
[6]E. K. Zeise, J. Saunders, A. I. Ahonen, C. N. Archie, and R. C. Richardson, Physica (Utrecht) 108B, 1213 (1981).
[7]B. Hebral, G. Frossati, H. Godfrin, and D. Thoulouse, Phys. Lett. 85A, 290 (1981).
[8]Leico Industries, Inc., New York.
[9]D. S. Greywall and P. A. Busch, J. Low Temp. Phys. 46, 451 (1982).
[10]D. S. Greywall and P. A. Busch, Rev. Sci. Instrum. 51, 509 (1980).
[11]E. Lhota, M. T. Manninen, J. P. Pekola, A. T. Soinne, and R. J. Soulen, Phys. Rev. Lett. 47, 590 (1981).
[12]R. J. Soulen, H. Marshak, and J. H. Colwell, private communication.
[13]B. M. Abraham, to be published.
[14]B. Weinstock, B. M. Abraham, and D. W. Osborne, Nuovo Cimento 9, 310 (1958).
[15]P. R. Roach, M. W. Meisel, and Y. Eckstein, Phys. Rev. Lett. 48, 330 (1982).
[16]R. A. Webb, R. P. Giffard, and J. C. Wheatley, J. Low Temp. Phys. 13, 383 (1973).
[17]W. C. Black, R. T. Johnson, and J. C. Wheatley, J. Low Temp. Phys. 1, 641 (1969).

# Contribution of Nuclear Magnetism to the Isochoric Pressure of bcc Solid $^3$He

C. T. Van Degrift and W. J. Bowers, Jr.
*Temperature and Pressure Measurements and Standards Division, National Bureau of Standards, Washington, D. C. 20234*

and

P. B. Pipes and D. F. McQueeney[(a)]
*Department of Physics and Astronomy, Dartmouth College, Hanover, New Hampshire 03755*
(Received 15 March 1982)

Isochoric pressure measurements have been made in bcc solid $^3$He from the melting point down to 29 mK in magnetic fields up to 8.0 T and for molar volumes of 23.834, 24.163, and 24.371 ml/mole. The measurements show that the pressure at high magnetic fields is thermodynamically inconsistent with reported values for the Weiss temperature deduced from nuclear magnetic susceptibility. Furthermore, the Weiss temperature deduced from our data at 24.25 ml/mole is in disagreement with that used in the theory of Roger, Hetherington, and Delrieu.

PACS numbers: 67.80.Jd, 67.80.Gb

The first indication that solid $^3$He is not a simple Heisenberg magnet was provided by the high magnetic field pressure measurements of Kirk and Adams in 1971.[1] Subsequent experiments in the neighborhood of the magnetic transition have proven that indication accurate.[2-7] In 1974 Guyer[8] pointed out a thermodynamic inconsistency between the Kirk-Adams results and measurements of the nuclear magnetic susceptibility.[9,10] The two types of experiments probe the same terms in the magnetic Hamiltonian and Guyer showed that they differed by about a factor of 2 in their predicted value for the lowest-order term. Since the Kirk-Adams result did not fit the standard

© 1982 The American Physical Society

high-temperature expansion very well and the precision of the susceptibility measurements was low, a definite conclusion could not be drawn at that time.

Since more recent measurements of the nuclear susceptibility[11-14] have provided a clearer picture of the behavior above the magnetic transition, we have undertaken high-precision measurements of the dependence of the isochoric pressure of solid $^3$He on temperature, magnetic field, and molar volume in order to get a less ambiguous consistency test. A recent, reasonably successful theoretical attempt[15] to explain the magnetic phase diagram of solid $^3$He did not include the Kirk-Adams results because of the inconsistency mentioned above.[16]

Figure 1 shows a drawing of the sample chamber, pressure sensor, and two thermometers. The 1.27-cm-diam by 0.075-cm-high sample chamber is formed by pressing and sintering two interlocking pieces of 2.50-cm-diam coin silver rod. Thermal contact with the sample was provided by the polished interior walls of the chamber; no sintered sponge or wire bundle was used. Pressure changes distorting the 0.41-cm-thick lower wall of the sample chamber changed the capacitive gap of an adjacent 300-MHz reentrant resonator which formed the tank circuit of a pulsed tunnel-diode oscillator.[17] A pressure change of 1 kPa in the sample chamber moves the wall by only 0.1 nm and thus changes the sample volume by only 0.13 ppm. This volume change is sufficiently small that the measurements can be considered isochoric without making any volume corrections.

To isolate the germanium thermometers from the magnetic field while still maintaining small temperature gradients, the upper portion of the sample chamber was formed from a single rod 38 cm long, partially split into two parallel arms, one supporting the primary germanium thermometer and the other attaching to the mixing chamber of a dilution refrigerator and an auxiliary thermometer. Both thermometers were enclosed within Pb shields and located where the field was always less than 0.06 T. Extensive measurements of these thermometers in conjunction with heaters placed on each arm allowed us to determine that the primary thermometer correctly registered the temperature of the sample chamber to within its calibration accuracy of 0.3 mK.

The sample fill line consisted of alternate sections of 0.06-cm-i.d.$\times$0.01-cm-wall stainless steel tubing and 0.05-cm-i.d.$\times$0.05-cm-wall oxygen-free high-conductivity copper tubing. The copper sections were thermally anchored at the 1-K pot, at the still, at each of three discrete heat exchangers, at the mixing chamber, and at the sample chamber.

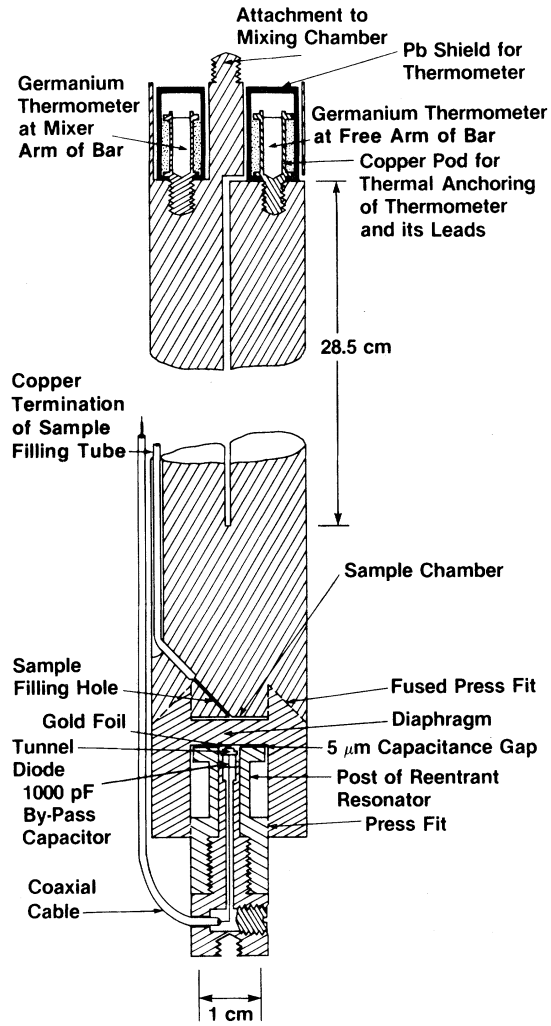


FIG. 1. Apparatus used for $P(T,V,H)$ measurement. The magnetic field is centered at the sample chamber and directed vertically. The thermometers and their Pb shields are located 33 cm above the sample where the magnetic field never exceeds 0.06 T.

Prior to the introduction of the $^3$He sample (< 1 ppm $^4$He), extensive measurements were made of the bias-voltage, temperature, and magnetic field dependences of the empty pressure sensor. Although these effects were comparable in magnitude to the effects under study, they were reproducible to within 1 Pa. Uncertainty in the frequency dependence of these corrections led to a modest increase in our final error estimates.

The typical measurement sequence required 30 days for each molar volume.[18] The sample was first formed by a nearly uniform cooling of all stages of the dilution refrigerator for a period of 24 h until the fill line was plugged. The still was then cooled further while heat was applied to remelt the sample. The sample was very slowly solidified again and annealed a few millikelvins below its melting temperature for 4 to 20 h until the pressure decreased by less than 30 Pa/h. It was then allowed to cool slowly over a period of 12 h to below 500 mK and then relatively quickly to our lowest temperature, 29 mK. Measurements were then made at 0, 6, and 8 T. At each magnetic field the temperature was first increased at a rate of 2.5%/h from 29 to 500 mK and then decreased at an identical rate. Finally, the sample was melted by slowly warming it from 400 mK at a rate of 2.4 mK/h.

Our data are shown in Fig. 2. Corrections have been made for apparatus-dependent effects (zero shifts and background temperature and field dependences). The slight hysteresis at higher molar volumes and magnetic fields and temperatures below 40 mK is the result of a thermal lag between the upward and downward sweeps of temperature.

The splitting between these isochores in a magnetic field can be shown to be in conflict with existing susceptibility data through the Maxwell relation $(\partial P/\partial H)_{T,V} = (\partial M/\partial V)_{T,H}$ and the assumption of a Curie-Weiss behavior, $M = \chi H$ with $\chi = C/(T-\theta)$. $C$, the molar Curie constant, is 5.0359 kPa mK ml/mole $T^2$, and $\theta$, the Weiss temperature, is a function of molar volume only. For $T \gg \theta$, these lead to the prediction that $P(T,V,H) - P(T,V,0) = (C/2)(d\theta/dV)(H/T)^2$. Eight published[9-14,19,20] determinations of $\theta$ are shown in Fig. 3 as a function of molar volume together with a solid line given by $\theta = -2.656(V/24)^{17.34}$ mK, where $V$ is the molar volume in ml/mole. With this $\theta$, the field dependence of the pressure must be given by

$$(T/H)^2[P(T,V,H) - P(T,V,0)] = -4.83(V/24)^{16.34}\ \text{kPa mK}^2/\text{T}^2.$$

A least-squares analysis[21] of the data shown in Fig. 2 which allows for higher-order magnetic terms and lattice terms yields the value $-(2.91 \pm 0.04)(V/24)^{20.7\pm2.0}$. This is the discrepancy noted by Guyer[22] and is evident even if only data above 100 mK are considered. The corresponding $\theta$ is shown as the dashed band in Fig. 3. Also plotted are the values determined separately from each of our isochores (solid dots) and those deduced by Guyer[22] from the data of Kirk and Adams[1] (solid squares).

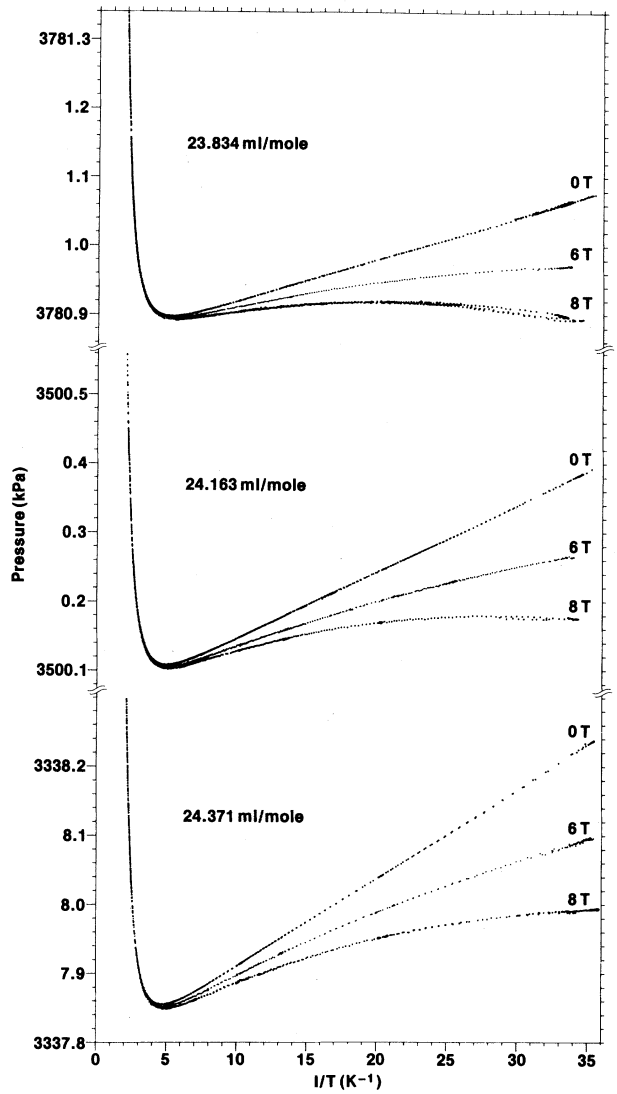


FIG. 2. Isochores for molar volumes of 23.834, 24.163, and 24.371 ml/mole and in fields of 0, 6, and 8 T. The splitting by the magnetic field is half of that expected from susceptibility measurements.

Since all susceptibility experiments were done in magnetic fields between 0.01 and 0.2 T, a possible resolution of the discrepancy lies in an anomalous field dependence of the Weiss temperature between 0.2 and 4.0 T. Andreev[23] has suggested a mechanism for this and Montambaux, Heritier, and Lederer[24] have given detailed formulas. We are presently testing their model against our data although such an anomaly seems

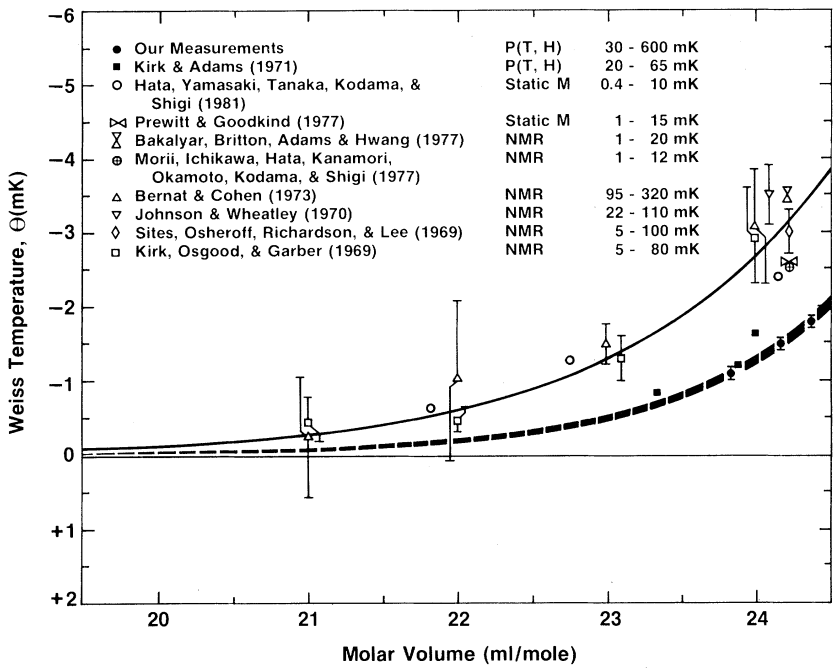


FIG. 3. Values of the Weiss temperature as determined by susceptibility (solid line and open points) and magnetostriction (dashed line and solid points).

to be ruled out by the magnetization measurements of Prewitt and Goodkind.[6,11] The proper comparison parameter for the two types of experiments is $H/T$, not just $H$, since the molar magnetization depends to first order only upon $H/T$. In our experiment $H/T$ varies from 0.03 to 0.28 T/mK and Prewitt and Goodkind have shown that the susceptibility is field independent for $H/T$ from 0.003 to 0.40 T/mK. The solution to this dilemma must be in the interpretation of the experiments, perhaps in the functional form used to represent the volume dependence of $\theta$ or, as noted by Guyer,[22] in the sensitivity of the Weiss temperatures deduced from susceptibility data to higher-order terms of the Hamiltonian.

The field-independent $(1/T)$ part of the exchange pressure as determined from our data is in excellent agreement with Panczyk and Adams[25] and is thermodynamically consistent with the zero-field specific-heat measurements of Greywall.[26] No *model-independent* means has been proposed to relate such data to the Weiss temperature. Contrary to a recent suggestion by Goldstein and Goldstein[27] that both the zero- and finite-field pressure data of Kirk and Adams could be fitted by a single parameter (as in the Heisenberg nearest-neighbor model), our data conclusively require two parameters.

In addition to the thermodynamic conflict described above, the magnetostriction measurements cannot be made consistent with the high-temperature limit of the most comprehensive theory presently offered to explain solid $^3$He, that of Roger, Delrieu, and Hetherington.[15] They have pointed out that the magnetic phase diagram of solid $^3$He can be reasonably well explained using an effective spin Hamiltonian and two exchange parameters—triple exchange, $J_t$, and planar four-spin exchange, $K_p$. The best-fit values for $J_t$ and $K_p$ predict a Weiss constant $\theta = -2.8$ mK at 24.25 ml/mole. This value for $\theta$ also fits the nuclear susceptibility data quite well. At that molar volume we get $\theta = -1.60 \pm 0.06$ mK. Our results are clearly inconsistent with their larger value.[28]

Useful discussions with R. A. Guyer, L. I. Zane, and J. H. Hetherington are acknowledged. This work was supported in part by the National Science Foundation.

[a]Now at Department of Physics, Cornell University, Ithaca, N.Y. 14853.

[1]W. P. Kirk and E. D. Adams, Phys. Rev. Lett. 27, 392 (1971).

[2]W. P. Halperin, C. N. Archie, F. B. Rasmussen,

R. A. Buhrman, and R. C. Richardson, Phys. Rev. Lett. 32, 927 (1974).
[3]R. B. Kummer, R. M. Mueller, and E. D. Adams, J. Low Temp. Phys. 27, 319 (1977).
[4]E. A. Schuberth, D. M. Bakalyar, and E. D. Adams, Phys. Rev. Lett. 42, 101 (1979).
[5]H. Godfrin, G. Frossati, A. Greenberg, B. Hebral, and D. Thoulouze, J. Phys. (Paris), Colloq. 41, C7-125 (1980).
[6]T. C. Prewitt and J. M. Goodkind, Phys. Rev. Lett. 44, 1699 (1980).
[7]T. Mamiya, A. Sawada, H. Fukuyama, Y. Hirao, K. Iwahashi, and Y. Masuda, Phys. Rev. Lett. 47, 1304 (1981).
[8]R. A. Guyer, Phys. Rev. A 9, 1452 (1974).
[9]W. P. Kirk, E. B. Osgood, and M. Garber, Phys. Rev. Lett. 23, 833 (1969).
[10]J. R. Sites, D. D. Osheroff, R. C. Richardson, and D. M. Lee, Phys. Rev. Lett. 23, 836 (1969).
[11]T. C. Prewitt and J. M. Goodkind, Phys. Rev. Lett. 39, 1283 (1977).
[12]D. M. Bakalyar, C. V. Britton, E. D. Adams, and Y. C. Hwang, Phys. Lett. 64A, 208 (1977).
[13]Y. Morii, K. Ichikawa, T. Hata, C. Kanamori, H. Okamoto, T. Kodama, and T. Shigi, in *Physics of Ultralow Temperatures*, edited by T. Sugawara *et al.* (Physical Society of Japan, Tokyo, Japan, 1978), p. 196.
[14]T. Hata, S. Yamasaki, Y. Tanaka, and T. Shigi, Physica (Utrecht) 107B, 201 (1981).
[15]M. Roger, J. M. Delrieu, and J. H. Hetherington, J. Phys. (Paris), Colloq. 41, C7-241 (1980).
[16]J. H. Hetherington, private communication.
[17]C. T. Van Degrift, Physica (Utrecht) 108B, 1361 (1981).
[18]We determined our molar volumes from the melting pressure values of E. R. Grilly, J. Low Temp. Phys. 4, 615 (1971).
[19]R. T. Johnson and J. C. Wheatley, Phys. Rev. A 1, 1836 (1970).
[20]T. P. Bernat and H. D. Cohen, Phys. Rev. A 7, 1709 (1973).
[21]To be published.
[22]R. A. Guyer, J. Low Temp. Phys. 30, 1 (1978).
[23]A. F. Andreev, J. Phys. (Paris), Colloq. 39, C6-1257 (1978).
[24]G. Montambaux, M. Heritier, and P. Lederer, J. Low Temp. Phys. 47, 39 (1982).
[25]M. F. Panczyk and E. D. Adams, Phys. Rev. 187, 321 (1969).
[26]D. S. Greywall, Phys. Rev. B 15, 2604 (1977).
[27]L. Goldstein and J. C. Goldstein, J. Low Temp. Phys. 45, 109 (1981).
[28]Subsequent to the submission of this manuscript, W. P. Kirk offered preliminary results from new NMR susceptibility measurements that $\theta = 1.1 \pm 0.1$ mK at 24.02 ml/mole.

# State-Dependent Recombination and Suppressed Nuclear Relaxation in Atomic Hydrogen

R. Sprik, J. T. M. Walraven, G. H. van Yperen, and Isaac F. Silvera
*Natuurkundig Laboratorium der Universiteit van Amsterdam, 1018-XE Amsterdam, The Netherlands*
(Received 24 February 1982)

A gas of 99.8% electron- and nuclear-spin-polarized hydrogen has been prepared. The surface and volume nuclear relaxation rates have been measured and the magnetic field dependence $(1+16.68/B)^2$ has been confirmed. The ratio of the surface recombination rate constants for collisions between atoms in hyperfine states, $a$-$a$ and $a$-$b$, is measured to be 2.23(25). Nuclear relaxation on the surface has been suppressed by using $^3$He to make an atomically flat surface.

PACS numbers: 67.40.-w, 67.70.+n

Since a gas of spin-polarized atomic hydrogen (H↓) was first stabilized a few years ago[1] experimental efforts have been devoted to achieving sufficiently high densities or low temperatures to observe Bose-Einstein condensation (BEC). Densities, $n$, of just under $10^{17}/\mathrm{cm}^3$ were soon obtained.[2,3] These were limited by recombination of H↓ to $H_2$ on the $^4$He surfaces of the sample cell[4-6]: Because of the nonnegligible adsorption energy of H↓ on He, H↓ surface coverages ($n_s$) increase with decreasing temperature and the recombination (which increases with $n_s^2$) limits the density.

Higher densities can be achieved by producing a state-selected gas of hydrogen. H↓ has two hyperfine states $|a\rangle = |\downarrow\uparrow\rangle - \epsilon|\uparrow\downarrow\rangle$ and $|b\rangle = |\downarrow\downarrow\rangle$ (↓, electron spin; ↓, nuclear spin), where $\epsilon \simeq a/4\mu B$, with $a$ the hyperfine constant, $\mu$ the Bohr magneton, and $B$ the magnetic field. Statt and Berlinsky[7] have pointed out that a nuclear-spin-polarized gas of pure $b$ state (H↓↓) would have a much lower recombination rate as these atoms do not have admixtures of the electron "up" state. They suggested that this state might be achieved by prefer-

© 1982 The American Physical Society 